U.S. Department
of Transportation

**Research and
Special Programs
Administration**

400 Seventh Street, S.W.
Washington, D.C. 20590

MAR - 4 1998

Mr. R. C. Watt
Vice President Hazardous Materials Packaging
All-Pak, Inc.
4225 Genesee Street
Suite 200
Buffalo, New York 14225

Dear Mr. Watt:

This is in response to your letter dated January 6, 1998, requesting clarification on the Hazardous Materials Regulations (HMR; 49 CFR Parts 171-180). Specifically, you ask if an "ARMLOK" transportation ring (plastic circular locking ring) used to reinforce the seal of a paint can lid meets the requirement for a positive (not friction) means of closure as specified in § 173.181(b) of the HMR.

Based on the photograph and product information on the "ARMLOK" transportation ring provided in support of your letter, it is the opinion of this Office that an "ARMLOK" meets the requirement for a positive (not friction) means of closure as specified in § 173.181(b).

I hope this answers your inquiry. If you need additional assistance, do not hesitate to contact us.

Sincerely,

Delmer F. Billings
Chief, Regulations Development
Office of Hazardous Materials Standards

Boothe
File: 173.181(b)
SC.357,

All-Pak®

All-Pak, Inc
4225 Genesee Street
Suite 200
Buffalo, NY 14225
716/632-5277
FAX 716/633 7745

716-632-5279

January 6, 1998

Corrected copy

4225 Genesee St. Buffalo, NY 14225 Suite # 200

Mr. Edward Mazzullo
Director of Hazardous Material Standards
United States Department of Transportation
Research and Special Programs Administration
400 Seventh Street South West
Washington, D.C. 20590

Dear Mr. Mazzullo:

In part 173.181(b), the requirement states, "The strong, tight metal can must be closed by positive means, not by friction." Does the D.O.T. consider metal cans or multifriction cans closed with the plastic locking rings as an acceptable method that meets this requirement? For your information, this combination package has been successfully pressure tested to a minimum of 95 KPA as prescribed in 178.605.

Thank you very much for your consideration, and I look forward to your response.

Very truly yours,

RCWatt

R. C. Watt (888)-257-2833)
Vice President Hazardous Material Packaging

RCW/mjh

All-Pak

Facsimile Cover Sheet

To: **Deborah Booth**
Company: **US DOT**
Phone: **202-366-0694**
Fax: **202-366-8700**

From: **R. C. Watt**
Company: **ALL-PAK, INC.**
Phone: **716-632-5277**
Fax: **716-633-7745**

Date: **01/14/98**
Pages including this cover page: **8**

Comments:

Attached is the information you requested in regard to a letter I sent dated January 6, 1998, questioning Part 173.181 (b).

Please see our ad in the Thomas Register

ARMLOKS

The innovation of this patented locking ring for paint cans is unrivaled in the certification process of paint containers. The armlok has passed and exceeded all UN testing requirements in existence today.

Ray

ARMLOK Transportation RINGS

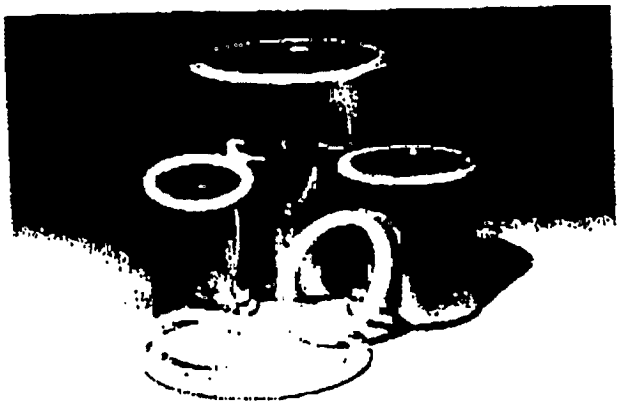

ARMLOK Size	One Gallon	One Quart/Litre	One Pint	Half Pint
Lids Dimensions	610 x 708 610 x 710.5	404 x 414 404 x 502	307 x 315	214 x 214
Qty Carton	250	750	500	500

Material High Density Polyethylene Plastic – Recyclable

FOB Point Chicago, IL

Background The ARMLOK Transportation Ring is tested and certified to bring our gallon through half-pint cans into compliance with stringent shipping standards outlined in UN Performance Oriented Packaging (HM-181 and CFR-49) guidelines. ARMLOK rings also meet United Parcel Service and United States Postal Service requirements.

Special Features The HDPE plastic ARMLOK ring carries a U.S. Patent and is recyclable. Tested and certified to meet and exceed 95-100 kPa hydroscopic pressure tests, ARMLOK is used by manufacturers to safely transport hazardous materials via air, sea and parcel service. ARMLOK rings also serve as a tamper-evident device.

Application ARMLOK rings are quick and easy to apply. They reduce the potential for workers' comp claims posed by all metal alternatives. ARMLOK can be applied by hand, rubber mallet, Harbil press, or a roller device. High speed application methods are being developed and your Brockway Standard Technical Support Group can assist in set-up.

*Sizes are inches (1st digit), and sixteenths of an inch (2nd and 3rd digits). The first three digits are diameter, the next three are height to the doubleseam.

Brockway Standard, Inc.

8607 Roberts Drive, Atlanta, GA 30350 • Telephone 1-800/527-2267 • [redacted]

FAX: 770/587-4075

Printed in U.S.

US005193705A

United States Patent [19]

McCallum et al.

[11] Patent Number: 5,193,705

[45] Date of Patent: Mar. 16, 1993

[54] TRANSPORTATION RING

[75] Inventors: Duncan J. McCallum, Hinsdale; John P. Williams, Geneva; Robert C. Jack, Schaumburg, all of Ill.

[73] Assignee: Armstrong Containers, Inc., Westchester, Ill.

[21] Appl. No.: 861,645

[22] Filed: Apr. 1, 1992

[51] Int. Cl.[5] B65D 45/32

[52] U.S. Cl. 220/319; 220/694; 220/354

[58] Field of Search 220/319, 354, 306, 284, 220/285, 380, 694

[56] References Cited

U.S. PATENT DOCUMENTS

1,593,633	7/1926	Johnson	220/284
1,847,245	3/1932	Hothersall	220/284 X
1,948,920	2/1934	Johnson	220/284 X
3,298,561	1/1967	McConnie .	
3,815,777	6/1974	Churan	220/319
3,913,785	10/1975	Pattershall .	
4,111,330	9/1978	Jordan	220/306
4,165,018	8/1979	Giggard	220/284
4,595,111	6/1986	Gould et al.	220/285 X
4,625,890	12/1986	Cater	220/319
4,728,003	3/1988	Davey	220/319
4,932,554	6/1990	Smith et al.	220/319
4,969,570	10/1990	Harvey et al. .	

FOREIGN PATENT DOCUMENTS

552834 2/1958 Canada .

Primary Examiner—Allan N. Shoap
Assistant Examiner—Paul A. Schwarz
Attorney, Agent, or Firm—McCaleb, Lucas & Brugman

[57] ABSTRACT

A unitary, removable, transportation ring for retaining the lid or cover on a cylindrical container, such as a metal paint can, which operatively fits over the outer margin of the container's friction-fit cover and upper rim flange; such ring being molded of rigid plastic material to form a unitary annular member of generally inverted U-shape cross section defining an annular body having a raised planar platform forming a stacking ring on the upper side of its body and two parallel annular limbs depending from the underside of the body; the radially outer annular limb having a continuous radially inwardly projecting locking bead or finger adapted to underengage the upper rim flange of the container whereby to secure and retain the transportation ring in operating position while the inner annular limb is relatively longer and thinner than the outer limb and is designed to depend freely into an underlying annular recess formed near the outer edge of the container's lid or cover to frictionally fit into a corresponding annular channel formed in the container's upper rim flange whereby to frictionally lock the lid or cover in place over the open upper end of the container; the transportation ring hereof effectively retaining the lid on the container to prevent leakage in the presence of abnormal hydrostatic pressures within the container.

7 Claims, 2 Drawing Sheets

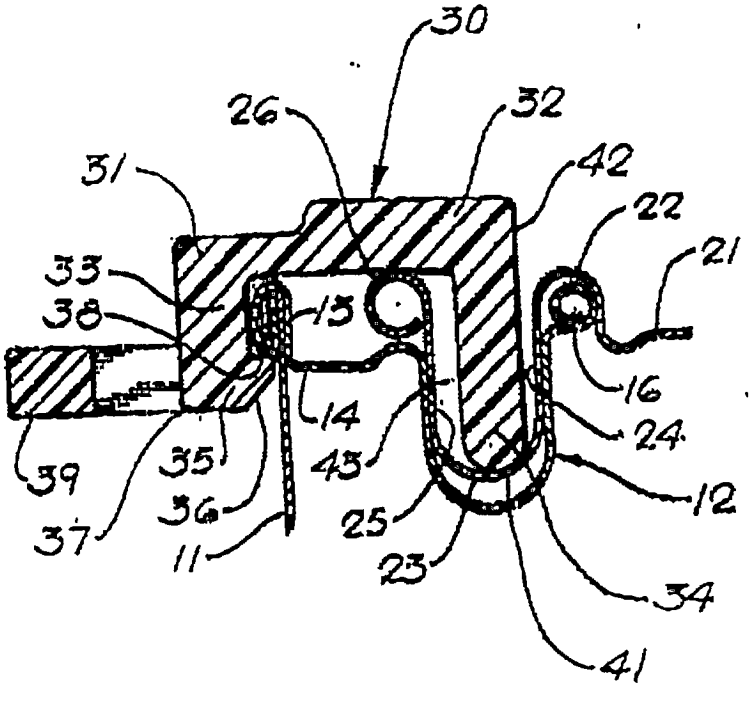

TEN-E PACKAGING SERVICES INCORPORATED

QUALITY CONTROL AUDIT RESULTS

Testing was completed by TEN-E Packaging Services, Inc. on April 3, 1996. The following dimensions, weights and material audits were performed by TEN-E Packaging Services on the test samples:

SEALING DEVICE (Armlok Overseal Used on All Metal Can Variables)	
• **Description:**	Armstrong Plastic Overseal to Fit Metal Cans
• **Material:**	High Density Polyethylene
• **Pigment:**	Natural
• **Tare Weight:**	31 Grams
• **Markings:**	ARMSTRONG CONTAINERS, INC. ARMLOK PATENT PENDING NON-REUSABLE RECYCLABLE SPI "2" HDPE Recycling Symbol

Overall Dimensions

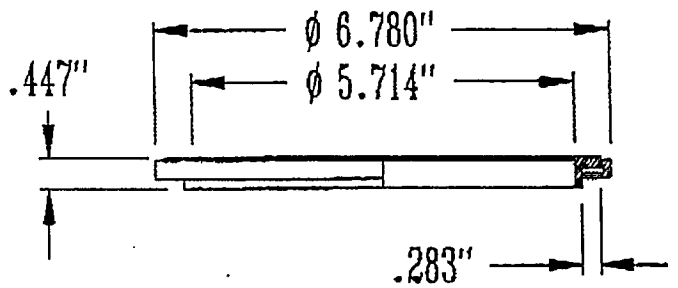

TENSE PACKAGING SERVICES INCORPORATED

QUALITY CONTROL AUDIT - Continued
BROCKWAY STANDARD ONE GALLON ROUND METAL CAN

PLUG

• Description / Material:	ETP Friction Fit Metal Plug
• Tare Weight:	58 Grams
• Lining:	None
• Wall Thickness:	1.) .0099" 2.) .0099" 3.) .0099"

Overall Dimensions

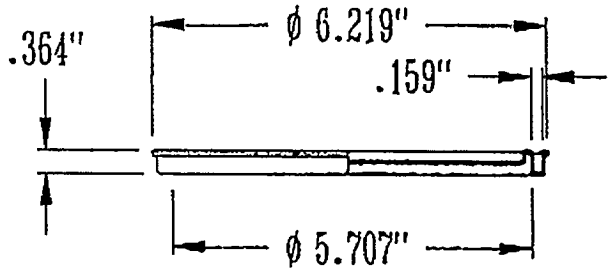

CAN

• Description:	1 Gallon Round Metal Can
• Material:	ETP
• Tare Weight:	271 Grams
• Lining:	None
• Overflow Capacity:	1.02 Gallons 3846 Grams
• Side Seam:	Welded
• Markings:	12/13/95 23:54 B5I-01
• Wall Thickness:	Sidewall: 1.) .0097" 2.) .0097" 3.) .0097"
	Bottom: 1.) .0094" 2.) .0093" 3.) .0094"

Overall Dimensions

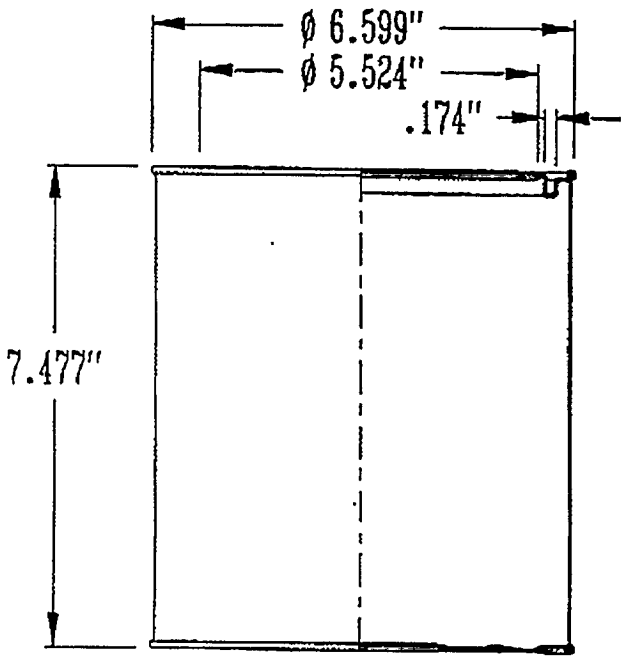

TENE PACKAGING SERVICES INCORPORATED

TEST PROCEDURES AND RESULTS - INTERNAL (HYDROSTATIC) PRESSURE TESTS
BROCKWAY STANDARD ONE GALLON ROUND METAL CAN

SAMPLE SIZE:
- 3 Samples/Can Variable

FILLING SUBSTANCE:
- Water

FILL CAPACITY:
- Maximum Capacity

CLOSURE APPLICATION:
- Used All-Pak Can Closer
- ARMLOK Plastic Overseal

CONDITIONING:
- Ambient

AREA OF PRESSURIZATION:
- Through Sidewall

TEST PRESSURE:
- 95 kPa (13.8 psi)

TEST DURATION:
- 5 Minutes

PRESSURE TEST EQUIPMENT:
- Regulated Water Source
- Marshalltown G23606 0-60 psi 3½" Gauge
- Marshalltown G16688 0-100 psi 5" Gauge ¼ of 1% Accuracy

TEST DATE:
- April 3, 1996

TEST STANDARD:
- Department of Transportation's Title 49 CFR; Section 173.27 (c) (2)
- ICAO Technical Instructions on the Safe Transport of Dangerous Goods By Air Part 3; 1.1.6.1

INTERNAL (HYDROSTATIC) PRESSURE TEST RESULTS
BROCKWAY STANDARD ONE GALLON ROUND METAL CAN WITH ARMLOK OVERSEAL

Sample	Results	Comments / Observations
1	Pass	All samples maintained the 95 kPa test pressure for five minutes without leakage.
2	Pass	
3	Pass	

Refer to Photo 2 in Appendix I for Internal Pressure Test Set-Up.

CRITERIA FOR PASSING THE TEST

- Packaging for which retention of liquid is a basic function must be able to withstand, without leakage, the prescribed test pressure.
- Dangerous goods may be contained in an inner packaging which does not itself meet the pressure requirement provided that the inner packaging is packed within a supplementary packaging which does meet the pressure requirement.

TENE PACKAGING SERVICES INCORPORATED

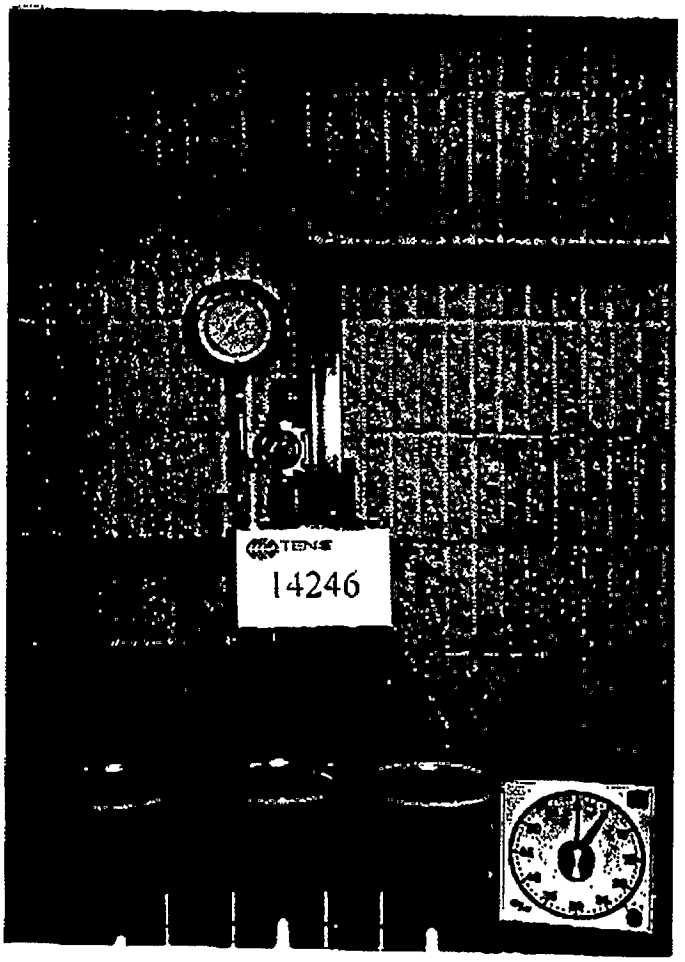

Photo # 3 - Internal Pressure Test Set-up/**Davies**

⇐ • Test Pressure = 95 kPa (13.8 psi)
• Test Duration = 5 Minutes

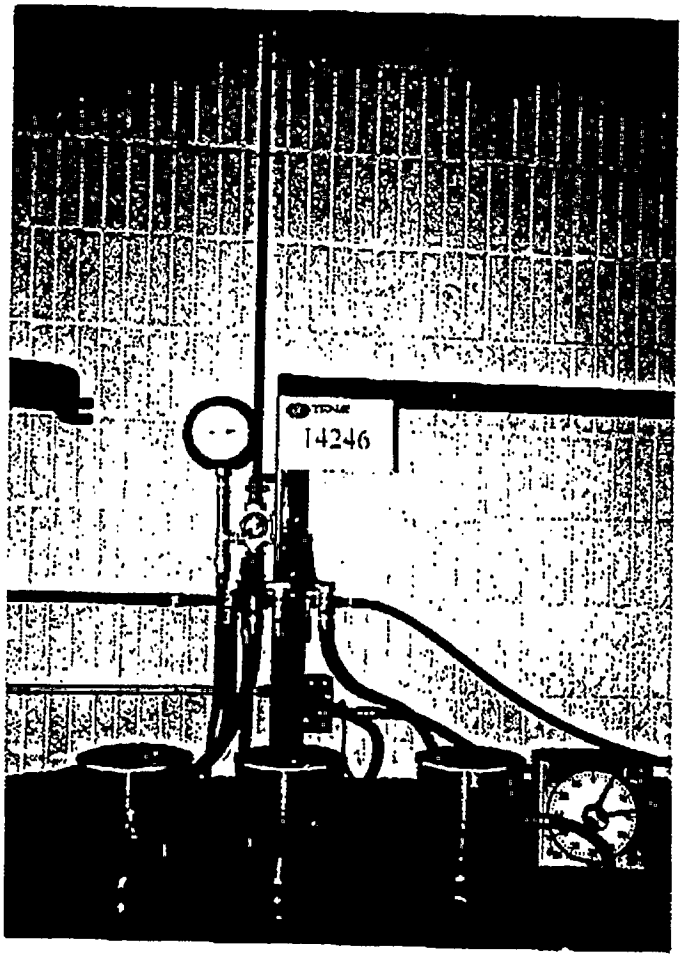

Photo # 4 - Internal Pressure Test Set-up/**Eagle**

⇒ • Test Pressure = 95 kPa (13.8 psi)
• Test Duration = 5 Minutes